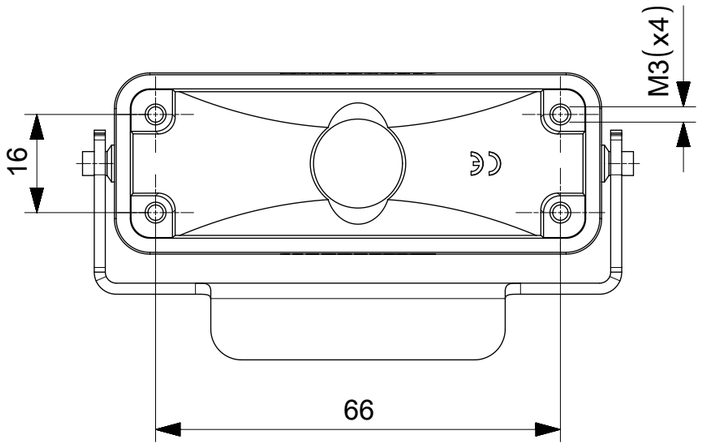

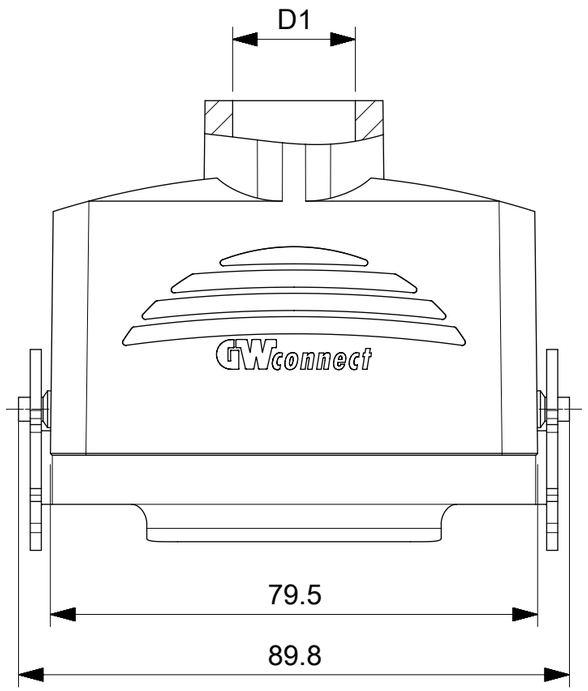

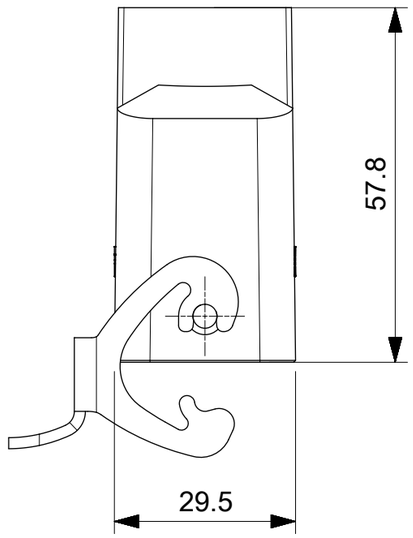

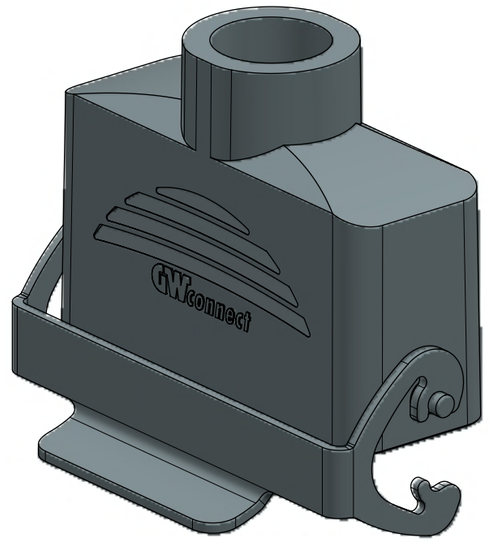

SAP No.	Eng.No.	D1
936012240	7816.4994.0	M20
936012242	7816.4995.0	M25
936012244	7816.4996.0	Pg13.5
936012246	7816.4997.0	Pg16

DOCUMENT STATUS	P1	RELEASE DATE	2018/03/06 16:24:10

FORMAT: master-tb-prod-A3
REVISION: H
DATE: 2017/10/06

SYMBOLS: E = 0; E = 0; E = 0; S = 0; ▼ = 0; C = 0; ☒ = 0; ■ = 0; ▽ = 0

THIS DRAWING CONTAINS INFORMATION THAT IS PROPRIETARY TO MOLEX ELECTRONIC TECHNOLOGIES, LLC AND SHOULD NOT BE USED WITHOUT WRITTEN PERMISSION

DIMENSION UNITS	SCALE
mm	1:1

GENERAL TOLERANCES (UNLESS SPECIFIED)

ANGULAR TOL	± °
4 PLACES	±
3 PLACES	±
2 PLACES	±
1 PLACE	±
0 PLACES	±

DRAFT WHERE APPLICABLE MUST REMAIN WITHIN DIMENSIONS

CURRENT REV DESC:

EC NO: 173170
DRWN: AKHEMIRI 2018/02/14
CHK'D: DMERONI 2018/02/26
APPR: AMELZI 2018/03/06

INITIAL REVISION:
DRWN: AKHEMIRI 2017/12/15
APPR: AMELZI 2018/03/06

FIRST ANGLE PROJECTION

DRAWING: A3-SIZE
SERIES: 93601

molex

16A STANDARD HOOD 1 LEVER TOP ENTRY

PRODUCT CUSTOMER DRAWING

DOCUMENT NUMBER	DOC TYPE	DOC PART	REVISION
936012240	PSD	000	A

MATERIAL NUMBER	CUSTOMER	SHEET NUMBER
SEE TABLE	GENERAL MARKET	1 OF 1